AN-8000

General Contens

1. AN 8000 Multi-Protocol Block Diagrams: Executive Protocol

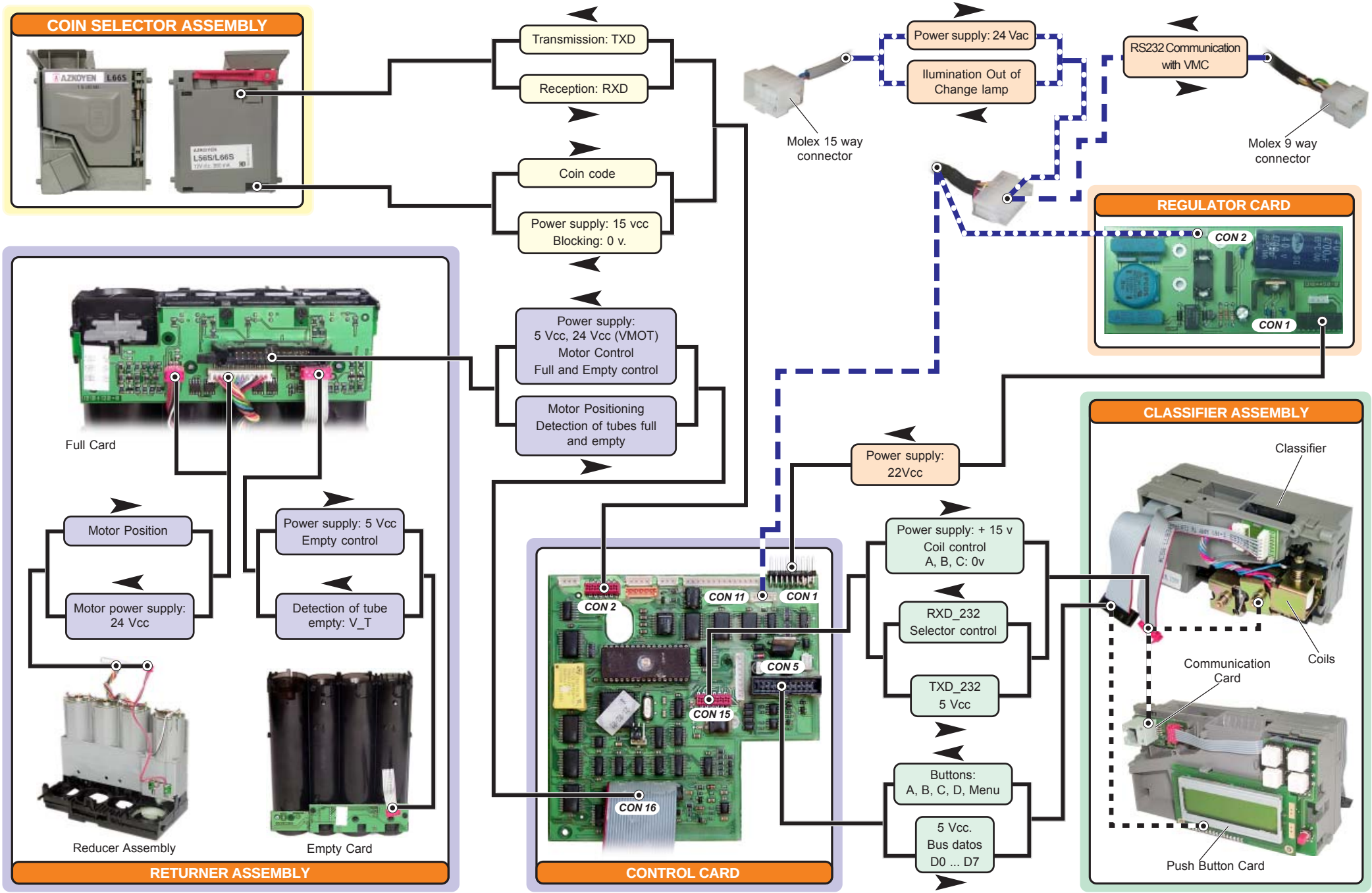

2. AN 8000 Multi-Protocol Block Diagrams: MDB Protocol

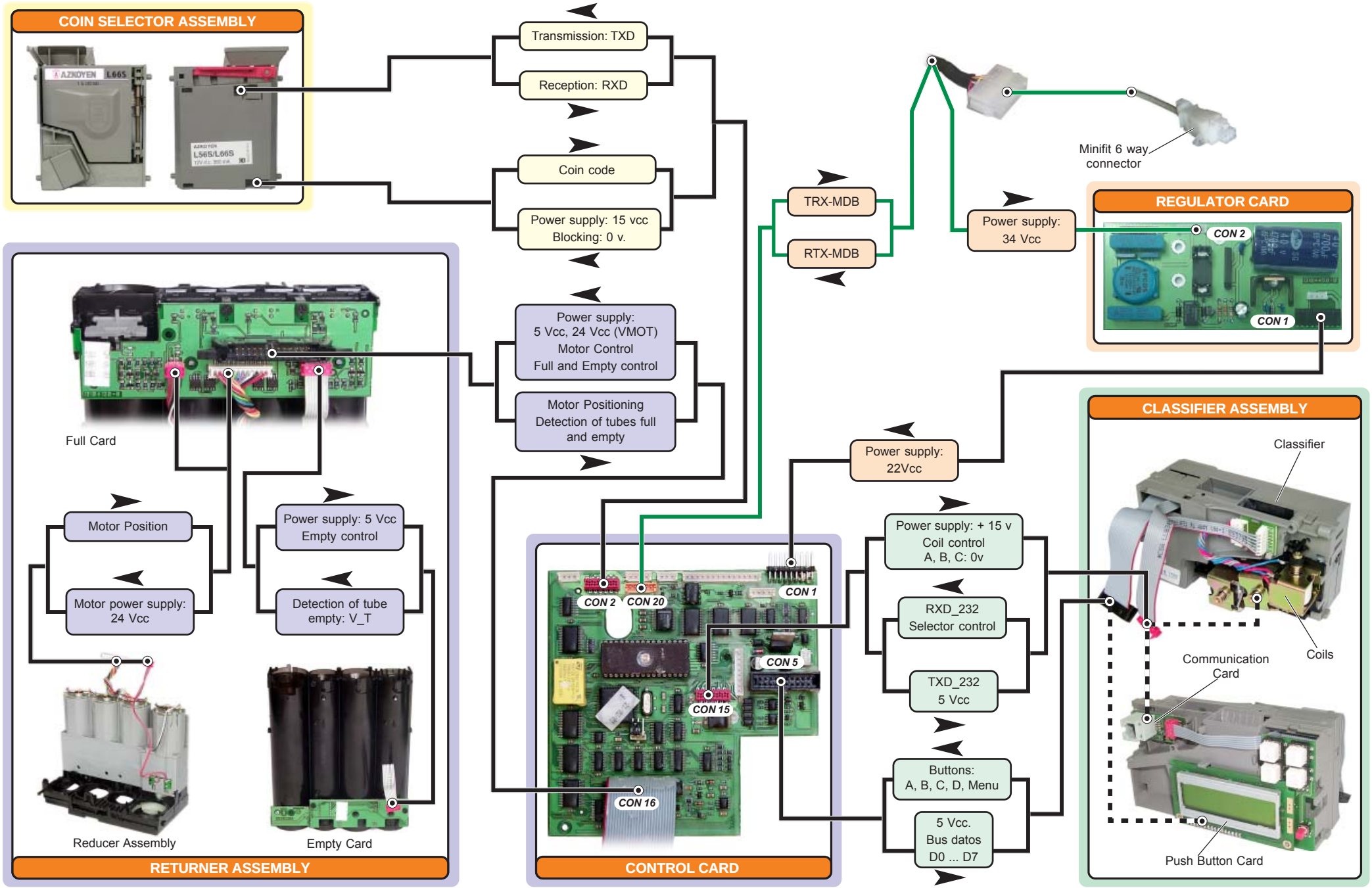

3. AN 8000 Multi-Protocol Block Diagrams: BDV Protocol

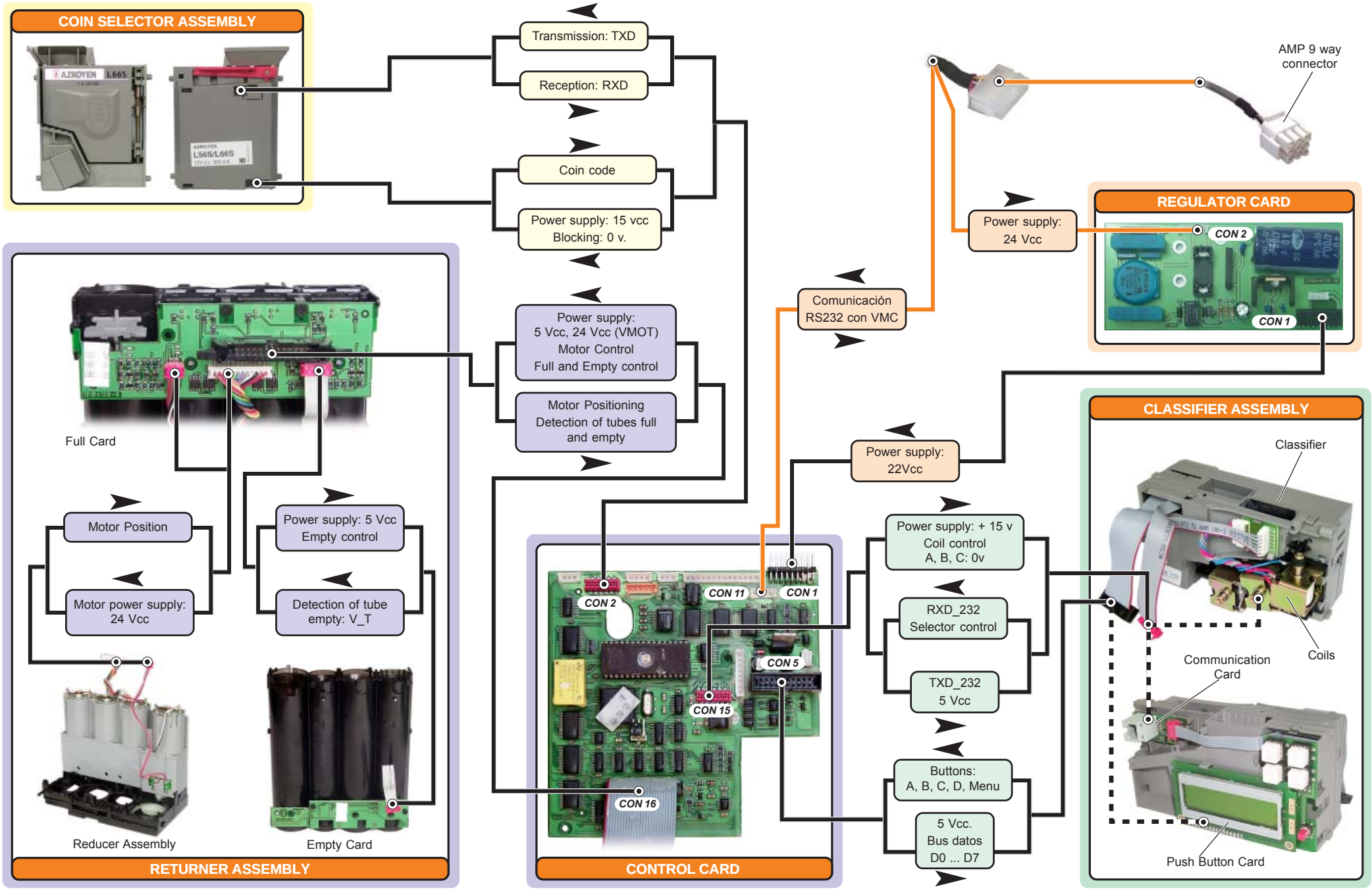

4. AN 8000 MDB Block Diagrams

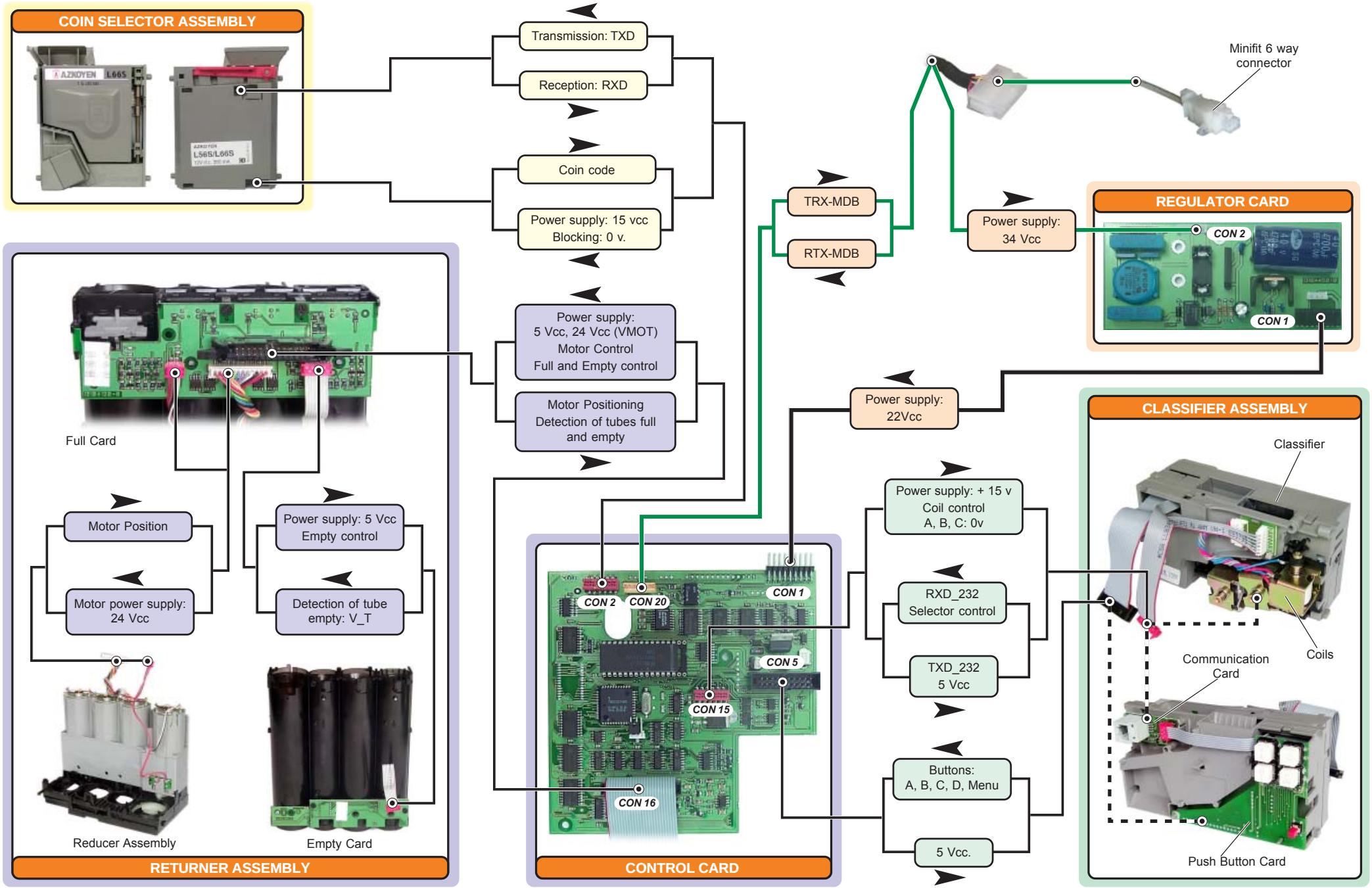

5. AN 8000 Mixed Block Diagrams: Price Lines Protocol

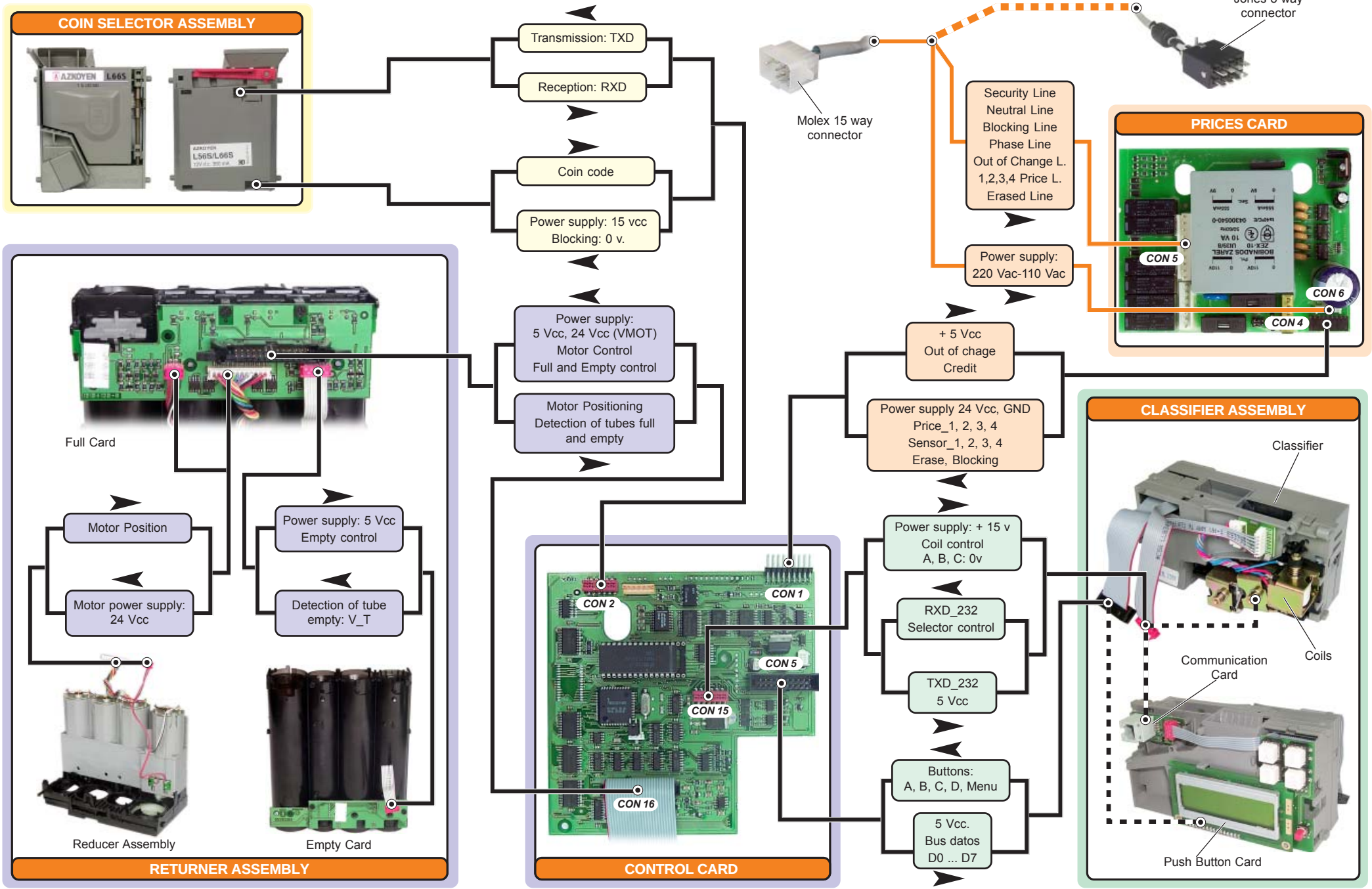

6. AN 8000 Mixed Block Diagrams: MDB Protocol

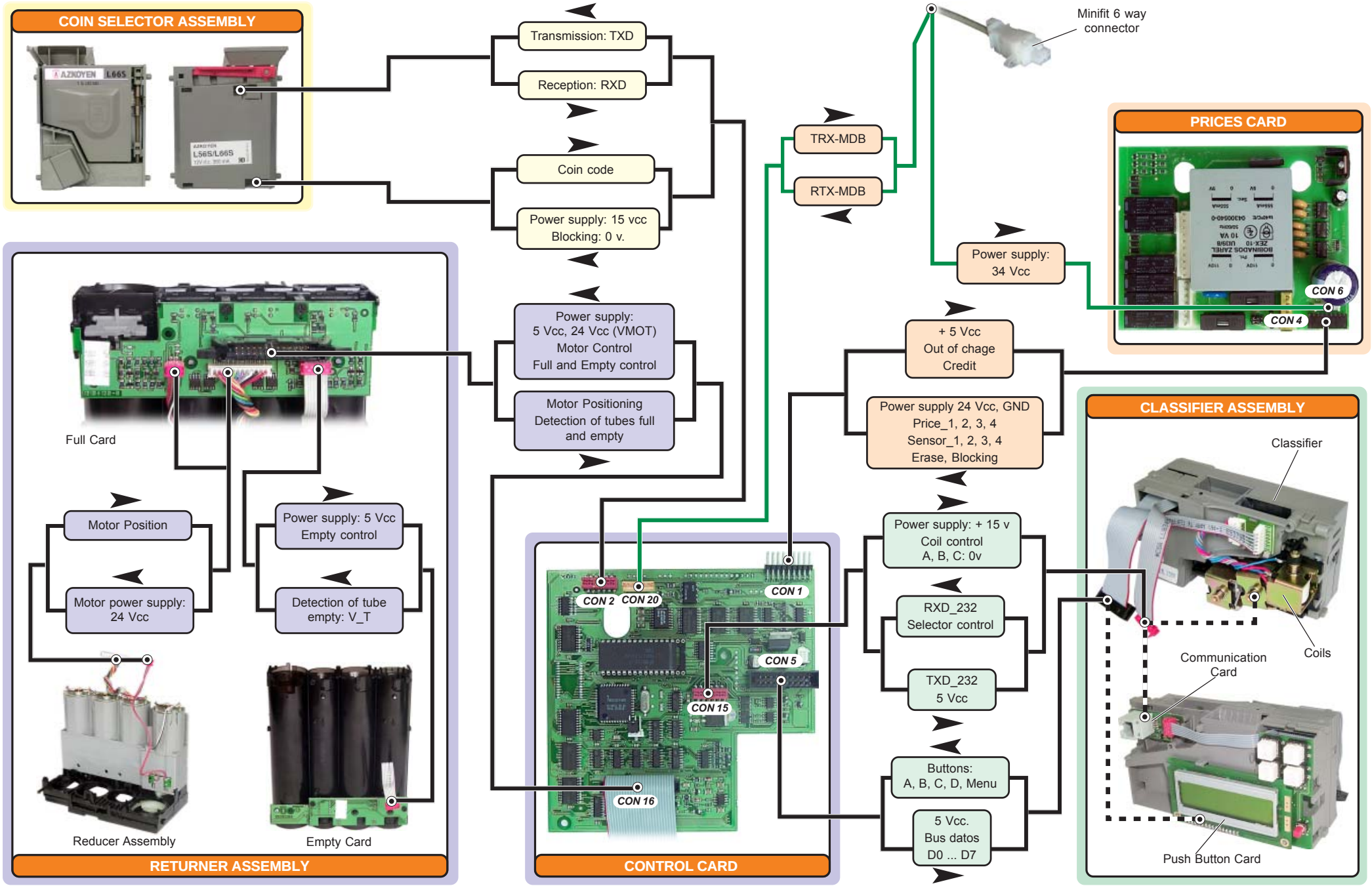

7. Classifier assembly

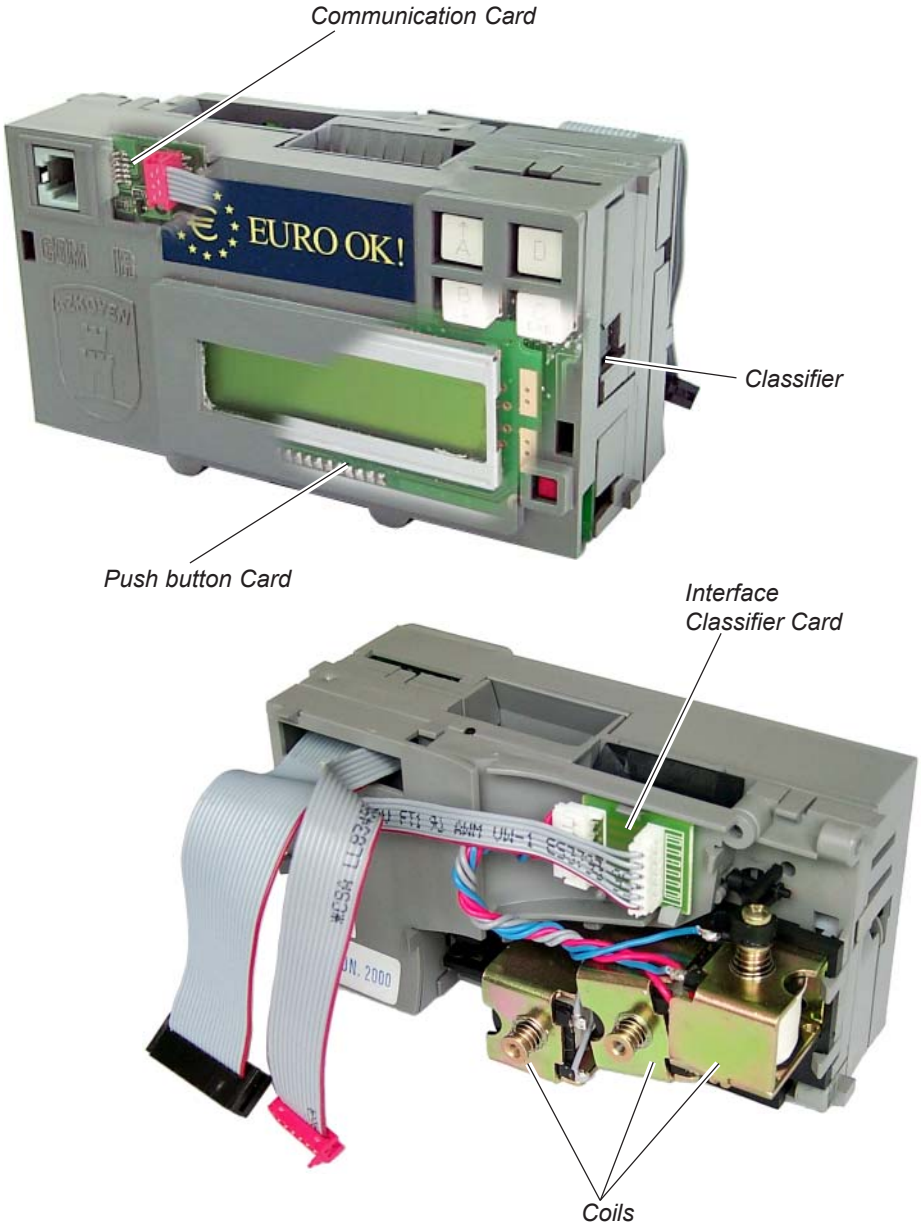

Figure 1. *Classifier assembly*

7.1 Classifier

Function

The function of the classifier is to direct all coins that leave the selector to their respective destinations:

- ✓ The change coins are sent to the returner tubes.
- ✓ The admitted coins that are not used for change are sent to the coin bin.
- ✓ The coins rejected by the selector are sent for return.

Description

It is made up of three electro-magnets, the cores for which are connected to the corresponding knives. Said knives are in charge of routing the coins to their respective destinations.

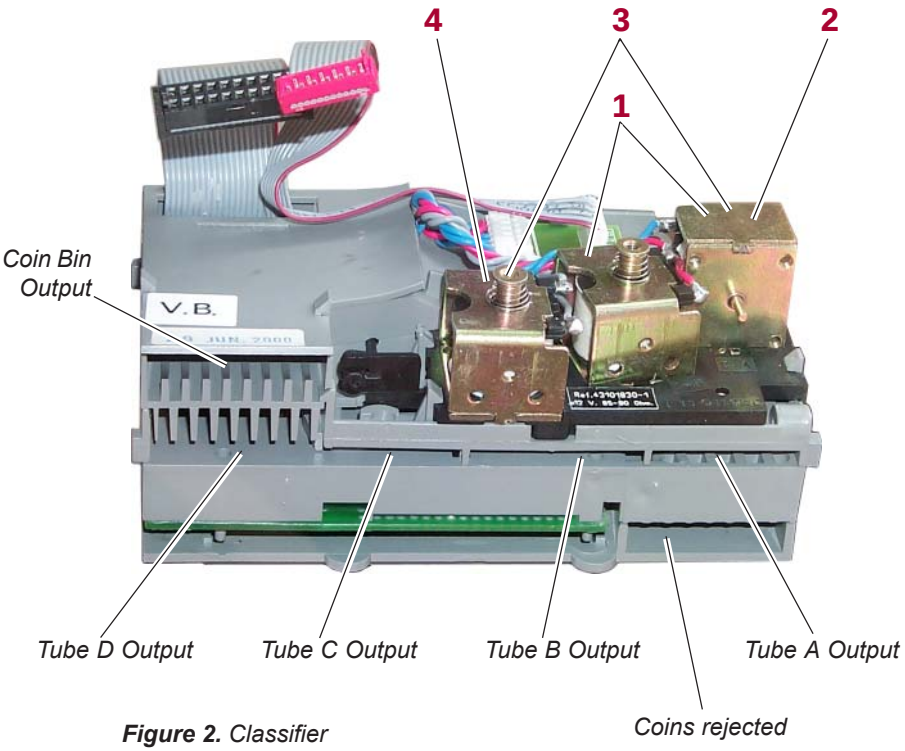

Figure 2. *Classifier*

1 *Classifier Coils, (tube **C**)*
2 *Classifier Coils, (tube **B**)*
3 *Classifier Coils, (tube **A**)*
4 *Classifier Coils, (tube **D**)*

Operation

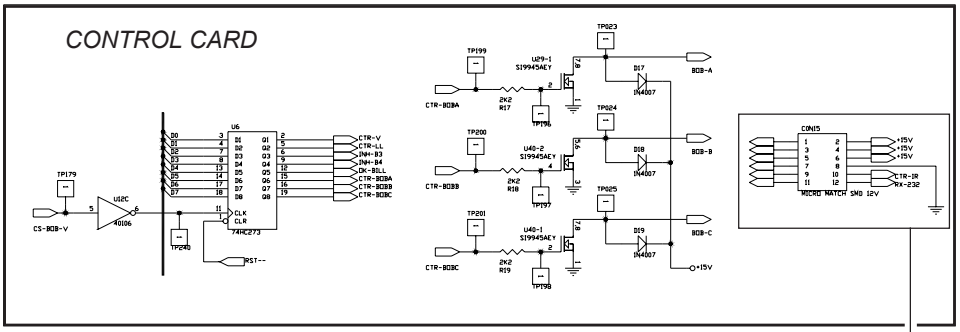

The coils are controlled from the control card.

The data bus (D5, D6, and D7) applies to unit U6 (74HC273). Using signal level "1" on pin 11 (clock), this bus is transferred to the output (Q6..Q8).

The U6 outputs are active when they are at level "1", and they are applied to the adjuster of the corresponding n-MOS transistors located at U29 and U40. These transistors directly control the classifier coils, sending them the negative signal.

The classifier coils remain connected at +15 V at one of their ends.

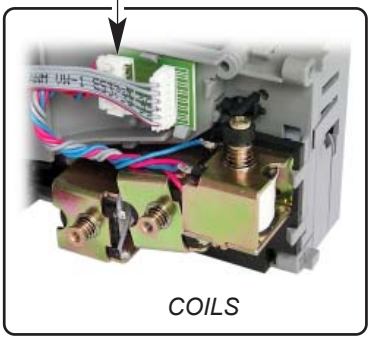

Figure 3. *Operation*

7.2 Communications card

Function

The function of the communications card is to serve as the interface in the selector programming process.

Description

It is composed of a printed circuit on which a 6-way Jack is mounted.

Operation

Through the input Jack, the RX-232 (payout unit reception) and the TX-232 PROG (payout unit transmission) communications lines are connected, which come from the programmer and the destination for which is the selector. The communications signals go to the control card through the "CON15" connector and are processed at the U21 (MAX 202), which has the mission of adapting them to RS-232 transmission levels (+12v…-12v).

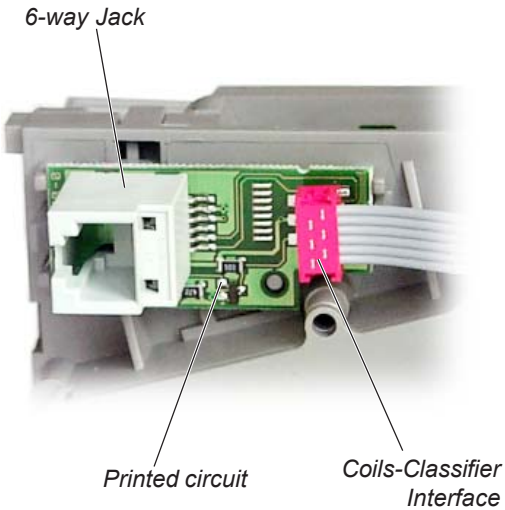

Figure 4. *Communications Card*

When payout unit programming is entered (keeping the red key pushed for a few moments), the communications port between the programmer and the selector is left open.

In order to communicate to the selector that programming is going to take place, its power is cut. The selector then sends back a burst of impulses as confirmation, and afterwards selector programming begins.

In order to produce the power cut, the programmer directly polarises T1 on the communications card, and at the same time pin 5 of the U31B (CTR-XSEL) on the control card goes to level 0 and pin 6 to level 1, cutting power to T301-1 and T300. As a result, the selector is left without power. The Control Card controls the power supply using the "CTRPWSEL" signal applied at pin 4 of the U31B.

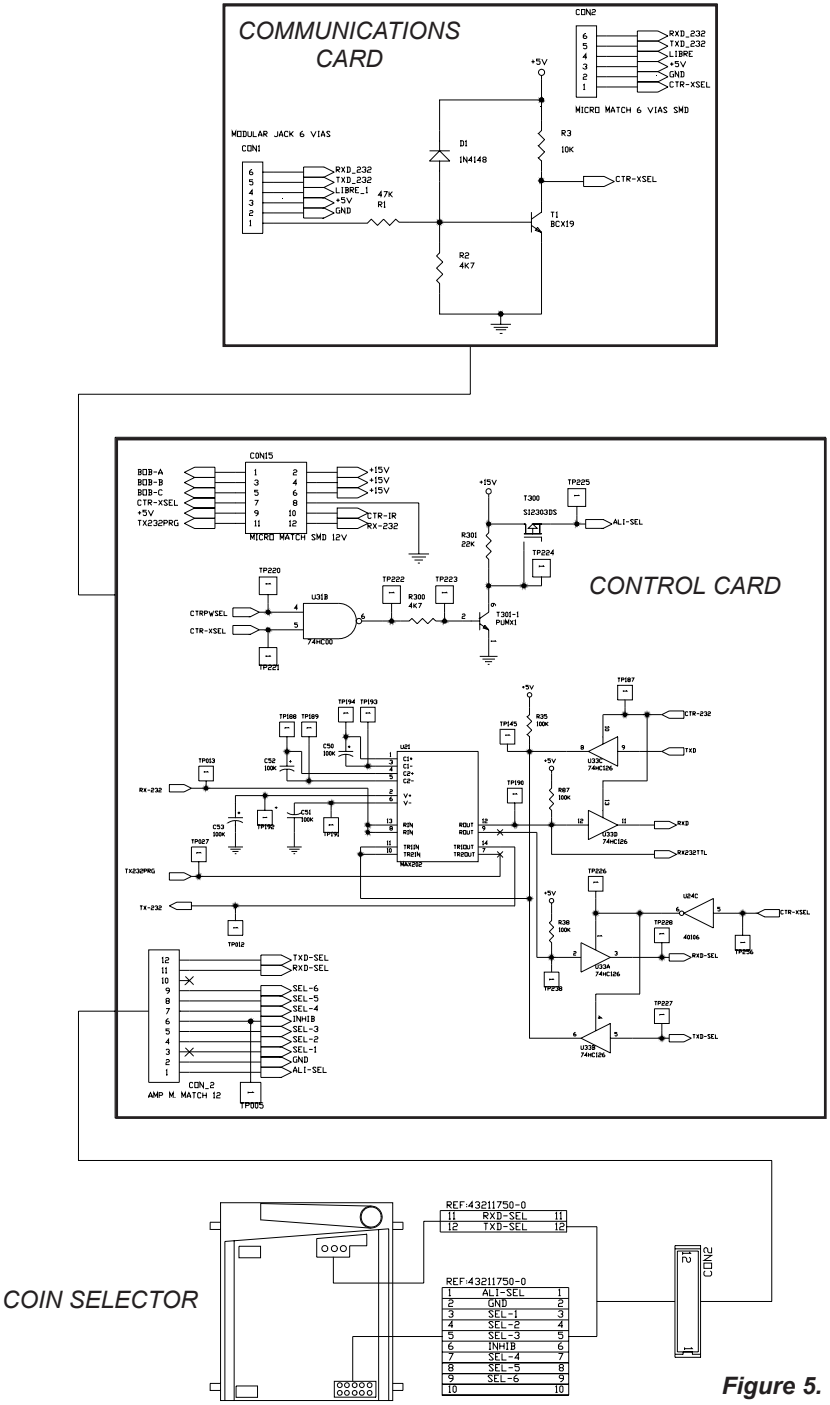

Figure 5. *Operation*

7.3 Push button card

Function

- ✓ Payout unit and selector programming.
- ✓ Manual emptying of the returner tubes.

Description

It is made up of four push buttons mounted on a printed circuit card.

In model **AN 8000 MDB** this card do not have display.

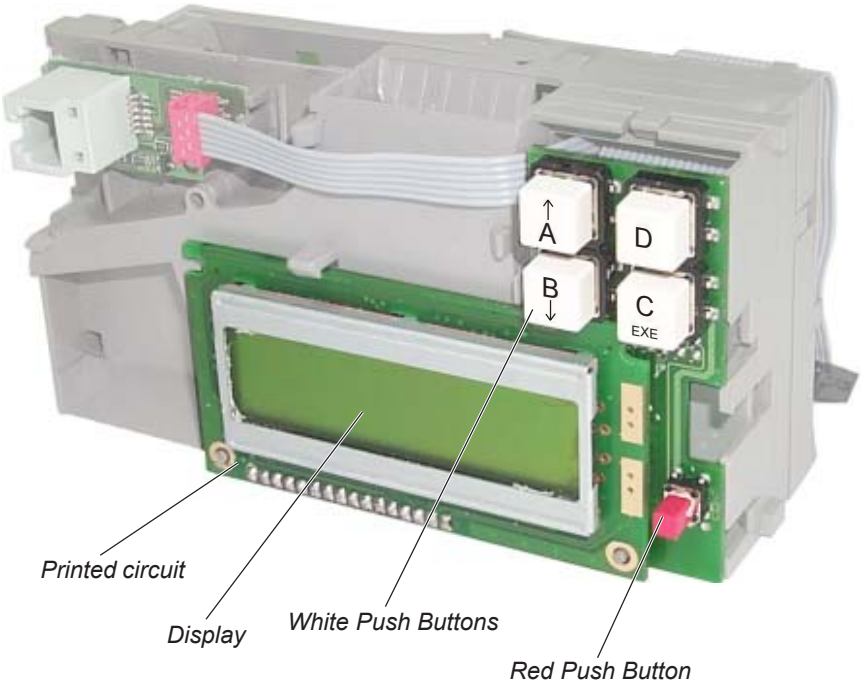

Figure 6. *Push button card*

Operation

The signal corresponding to each push button is sent to the U17 (74hc251) of the control card, which is a multiplexer circuit. This signal appears through pin 6 at level 0 and incorporates to the data bus as D0. The keypad reading process is enabled with level 0 at pin 7 (strobe).

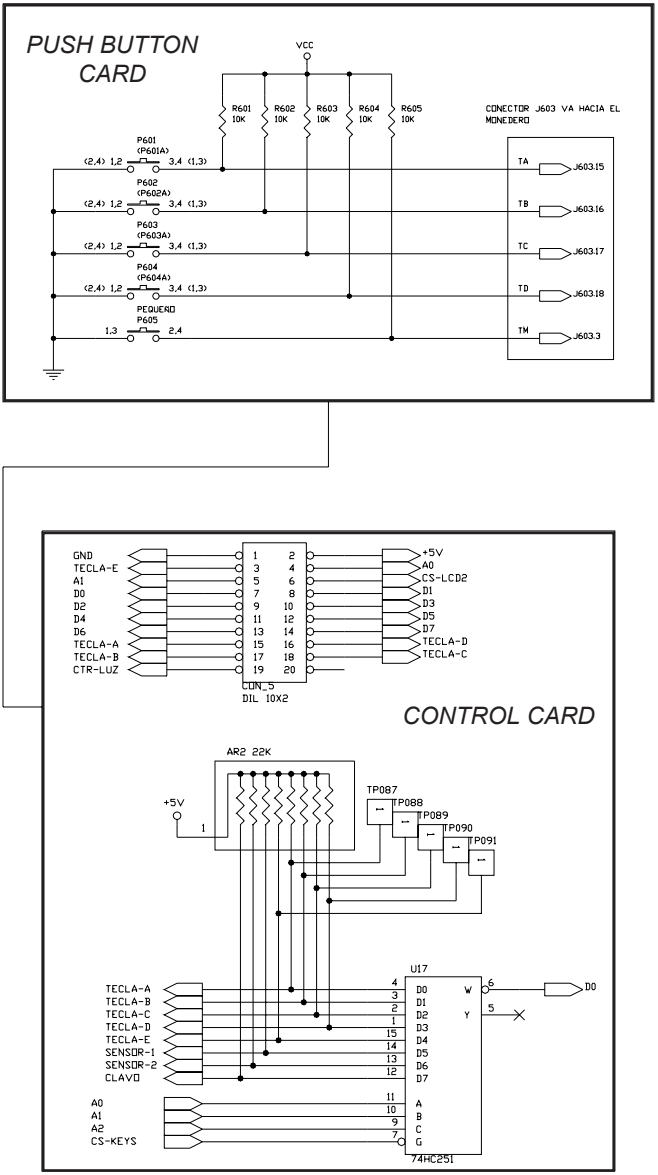

Figure 7. *Operation*

8. Returner tubes assembly

Figure 8. *Returner tubes assembly*

8.1 Reducer assembly

Function

It returns the change coins and accounts for them.

Description

It is made up of four 24VDC motors with their corresponding reducers and a knife system for extracting the coins.

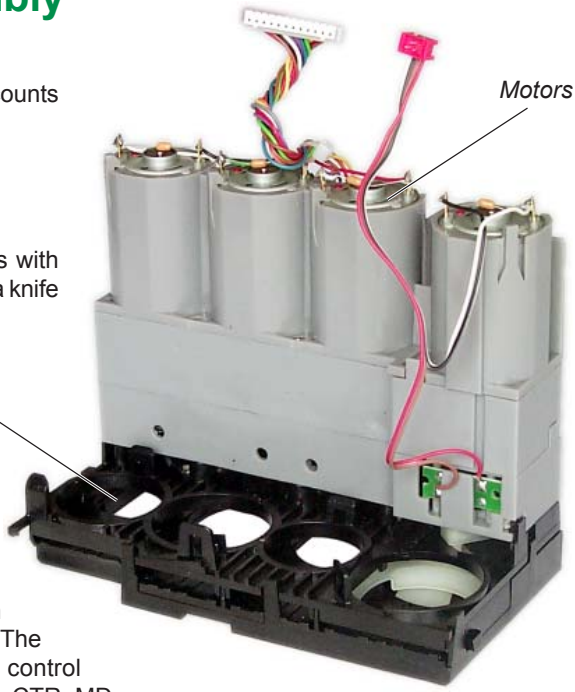

Figure 9. *Reducers Assembly*

Operation

The operational order starts from the control card, specifically from the U14 (74HC273) (**figure 10**). The outputs corresponding to motor control are: CTR-MA, CTR-MB, CTR-MC, CTR- MD, and AGUA. Through a level 1 signal on pin 11 (clock), the data bus is transferred (D0...D7) to the output (Q0...Q7).

As a security measure in order to prevent liquid entry from causing short-circuits and activating any motor, the AGUA signal has been entered, which is complimentary to the rest of the CTR's so that, in the idle position, this signal is at level 1, which blocks the motors (**figure 10**, water circuit schematic) while the CTR-MT signal is absent.

The motor energising circuits are on the full card. There are four equal circuits (**figure 10**), and each one is made up of an energising part and another braking part.

The operating circuit for activating and braking Motor A is the following:

When CTR_MA goes to level 1, the T702 is saturated, causing T704-1 to be cut, and as a result, transistor U02-1 is saturated as long as the CTROL_MT signal is activated. Motor A then starts to operate.

In order to deactivate the motor, the CTR_MA signal goes to level 0. As a result, transistor U02-1 cuts the power supply. When the power supply to the motor is stopped, it continues to rotate on its own inertia, generating an electromotive force. This is the moment when the braking circuit acts. Transistor T703_1 cuts the power supply, and it directly polarises the adjuster for the U01-1 transistor, and in this way the electromotive force generated by the motor is short-circuited by said transistor.

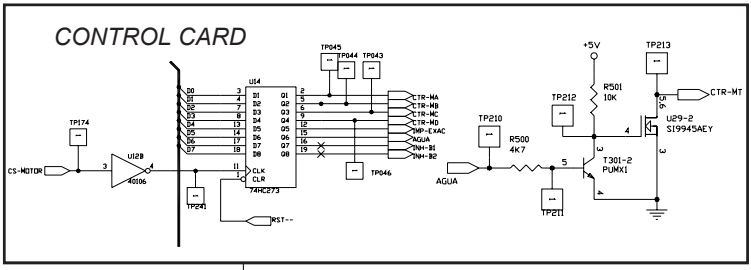

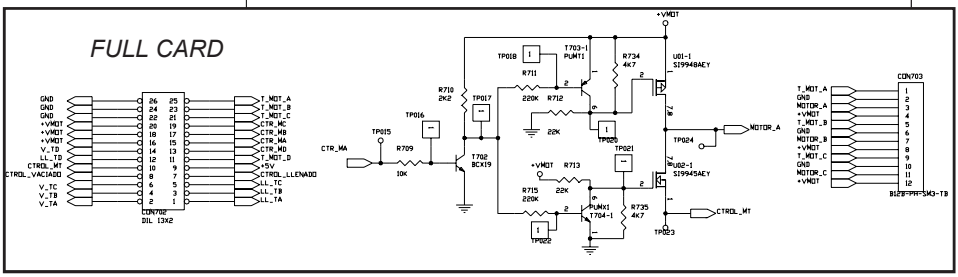

Figure 10. *Operation*

The dispensed coins are controlled through a limit microswitch incorporated by each one of the reducers. For each 360º turn that a reducer makes, it activates a limit microswitch, and it sends a level 0 signal to the U20 (74HC251), which is a multiplexer circuit located on the control card. The limit microswitches are read when pin 7 is at level 0.

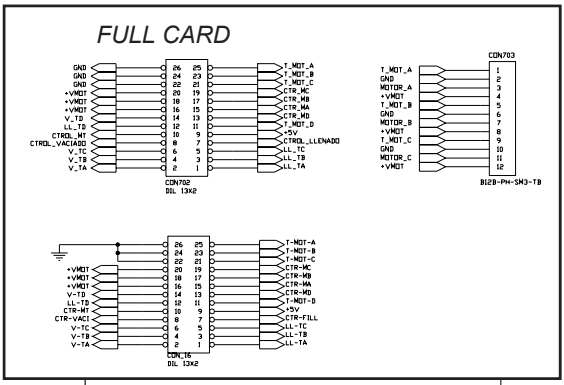

LIMIT MICROSWITCH

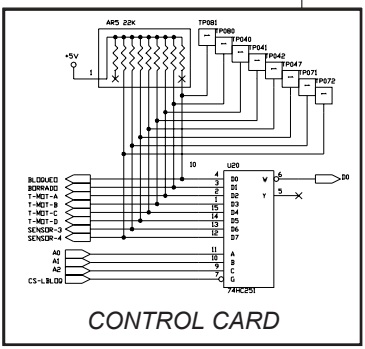

8.2 Full card

Function

It has a dual function:

- ✓ It controls when the tubes are full, informing the control card so that coins are not sent to the corresponding returner tube.
- ✓ It serves as the interface card between the reducer assembly and the control card.

Description

It is made up of a card located physically in the upper tube area, which has 4 infrared light-emitting photodiodes and 4 phototransistors, one pair (photodiode-phototransistor) per tube, and their respective transistors for full control. It also incorporates the components necessary for operating the reducer assembly.

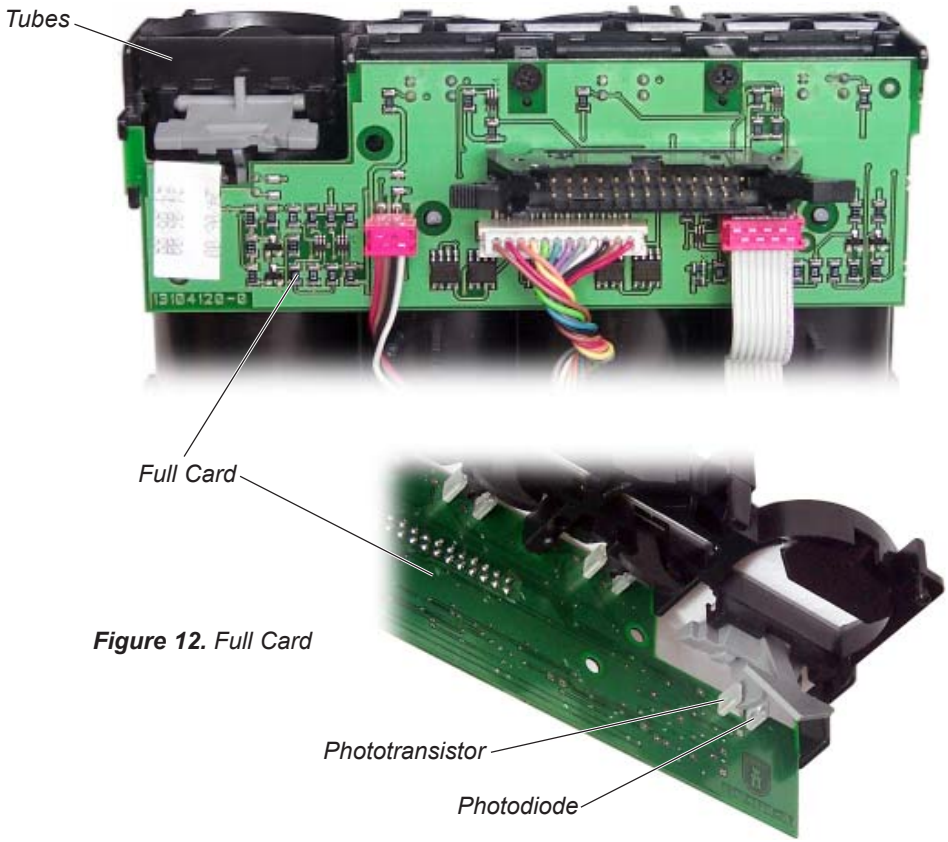

Figure 12. *Full Card*

Operation

The 4 photodiodes are connected in series and they are powered by 5VDC. Their power supply is controlled through the "CTROL_LLENADO" signal coming from transistor T10 on the control card, which in turn is governed by the U6 (74HC273, pin 5). Unnecessary consumption is thus avoided when coins are introduced that do not go to the returner tubes.

When a coin is introduced that does go to a returner tube, the photodiodes receive power, and the infrared beam corresponding to the tube where the coin is directed is interrupted by the rocker-arm that goes between the photodiode and the phototransistor for that tube. At that moment, the 5V power supply to the transistor is cut, and as a result the LL_X signal (X=A, B, C, D) goes to level 0.

The "LL_XW signal is sent to the multiplexer circuit U4 (74hc251) located on the control card, which, when it is enabled at level 0 by pin 7, is incorporated to the data bus as D0.

When the corresponding tube is full, the infrared beam will remain interrupted permanently, and when a coin is introduced, it will be sent to the coin bin.

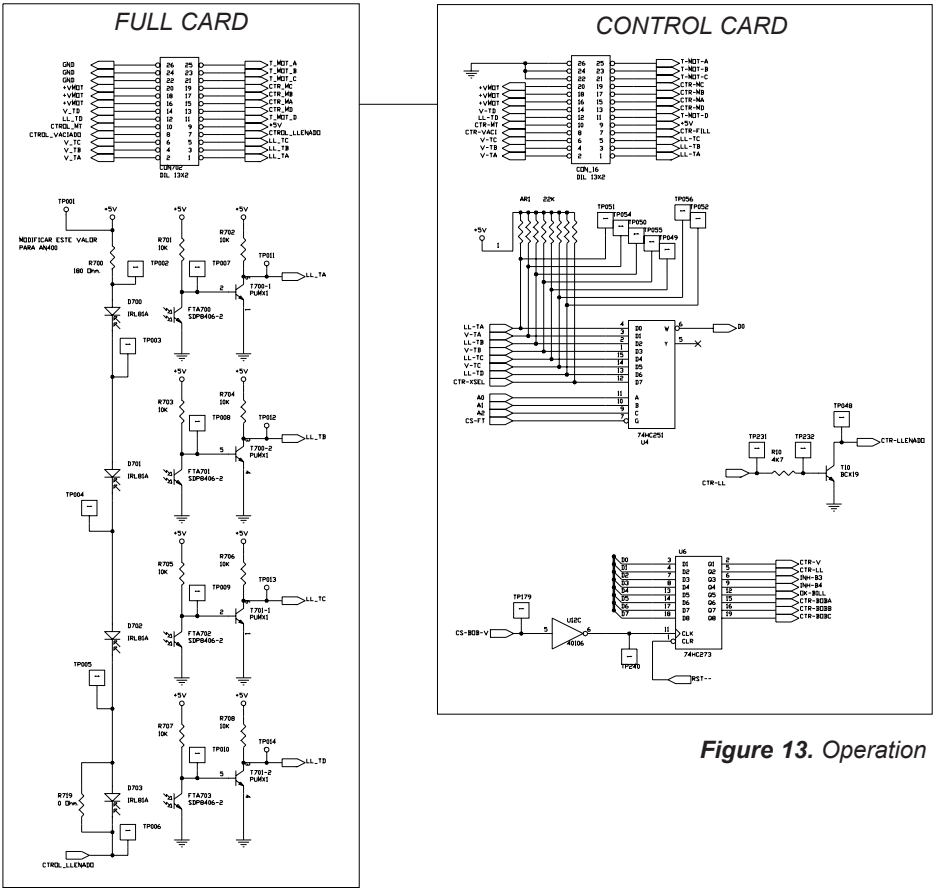

Figure 13. *Operation*

8.3 Empty card

Function

The empty card is in charge of controlling the minimum level of coins in each tube.

Description

It is made up of two printed circuit cards located physically in the lower tube zone, which hold four photodiodes and four phototransistors.

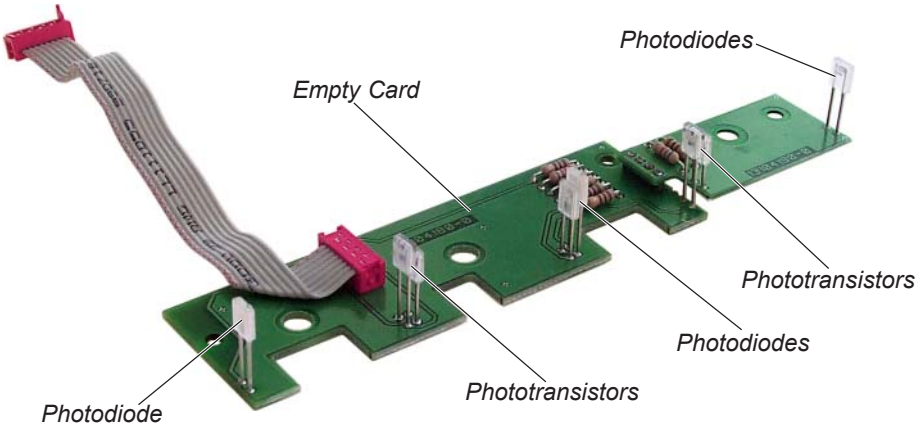

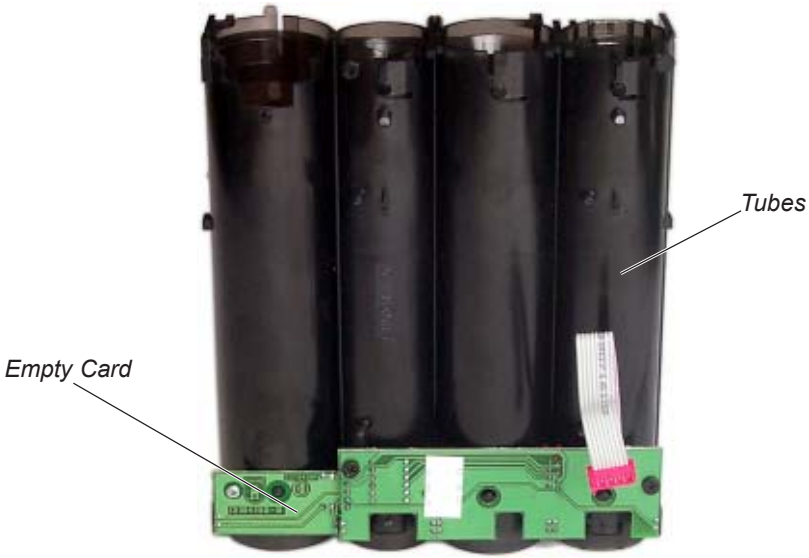

Figure 14. *Empty Card*

Operation

The power supply to the photodiodes is individual, using a 100-Ohm serial resistor applied with 5VDC.

In order to reduce consumption while the payout unit is not admitting any coins, the "CTROL_VACIADO" signal leaves the photodiodes without power. Said signal comes from transistor T14 located on the control card, which in turn is governed by the U6 (74HC273, pin 2).

When the coin level falls below the physical level where the photodiodes are located, the corresponding phototransistor is saturated, and a V_TX signal (X=A, B, C, D) at level 0 is sent to the multiplexer circuit U4 (74hc251) located on the control card, which, when enabled at level 0 by pin 7, is incorporated to the data bus as D0.

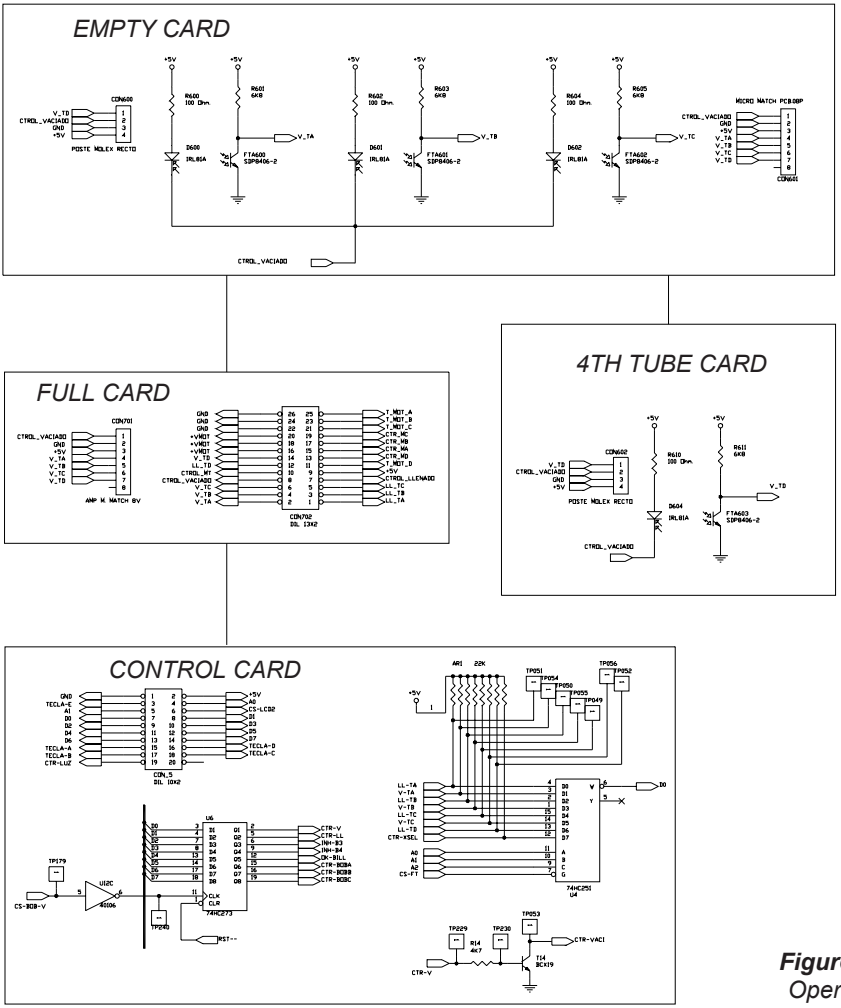

Figure 15.
Operation

9. Regulator circuit

Function

The function of the regulator circuit is to convert the 34VDC to 22VDC that will serve as the power supply to the payout unit.

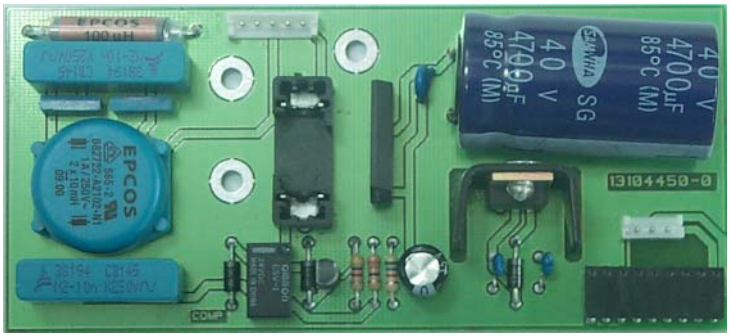

Figure 16. *Regulator circuit*

Operation

This card can be supplied with 24VAC or 34VDC power. When it operates with 34VDC power, said tension goes through the rectifier bridge, arriving at the control circuit input (LM317), which is adjustable through resistors R2 and R3. The output tension that it supplies is 22VDC.

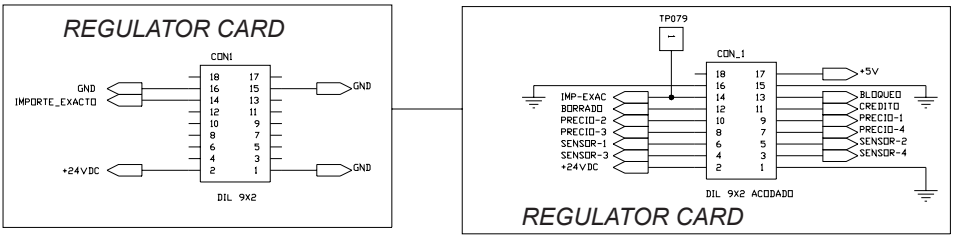

Figure 17. *Operation*

10. Prices Card

Figure 18. *Prices Card*

10.1 Function

Its function is double:

- ✓ Power supply.
- ✓ Entrances / Exits

Poweer Supply Function

It turns the power supply of entrance, in 24 Vcc necessary for the operation of the control card, to it has two circuits according to is the protocol of operation **MDB** or **Line of Price**.

MDB

This circuit is able to regulate a voltage of entrance from 34 Vcc to 24 Vcc. and to turn it 22 Vcc necessary for the operation of the card control.

The circuit in charge to make this regulation is U10 (LM317) whose polarization this fit so that A provides 22Vcc with a current of 1,5 A.

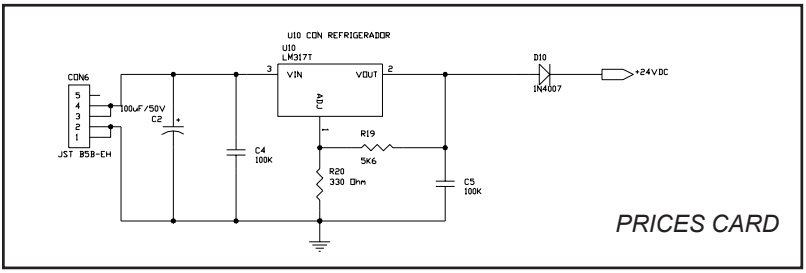

Figure 19. *U10 Circuit (MDB)*

Price Lines

Can work with a voltage of entrance of 220 Vac or 110, depending on the position of bridges JP1 and JP2, (to see figure 20, bridges to 220 V and 110 V.)

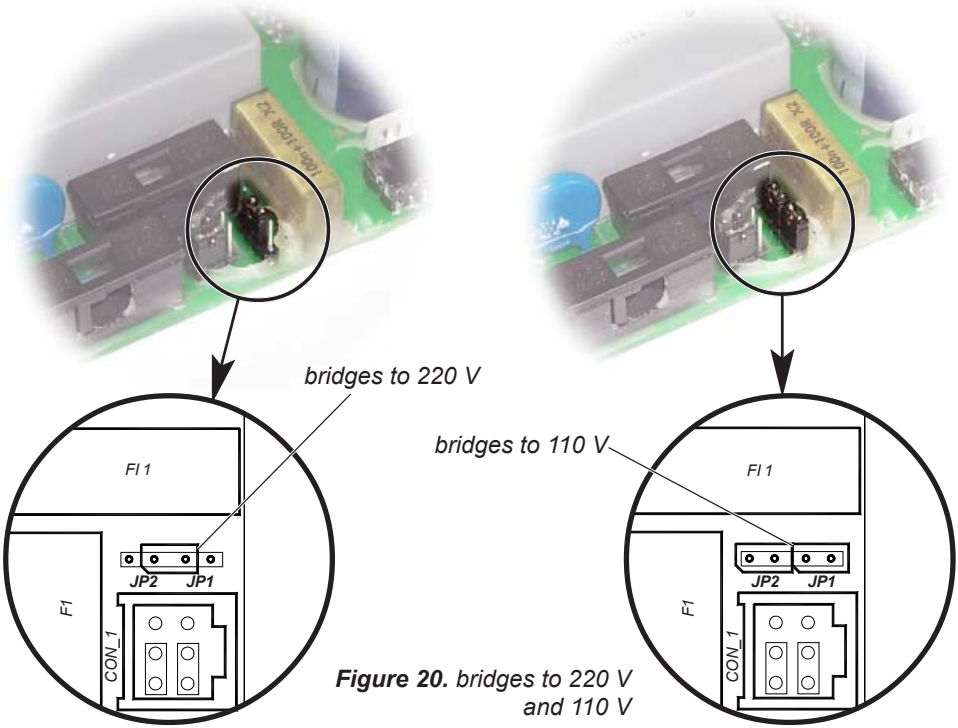

Figure 20. *bridges to 220 V and 110 V*

The used transformer is made up of two both primary 110 primary windings and secondary so that working to Vac is connected in two parallel and when it works to 220 Vac are connected in series. Both secondary they are united in series providing 18 Vac and one power of 10 VA, this voltage is rectified and next leaked by the C3 condenser.

The circuit of feeding to the primary one of the transformer is protected by means of a fusible F1 of 1 A. and a varistor V10 that absorve tips superior to 275 Volts

In order to annul or to attenuate electrical noises is a filter RC.

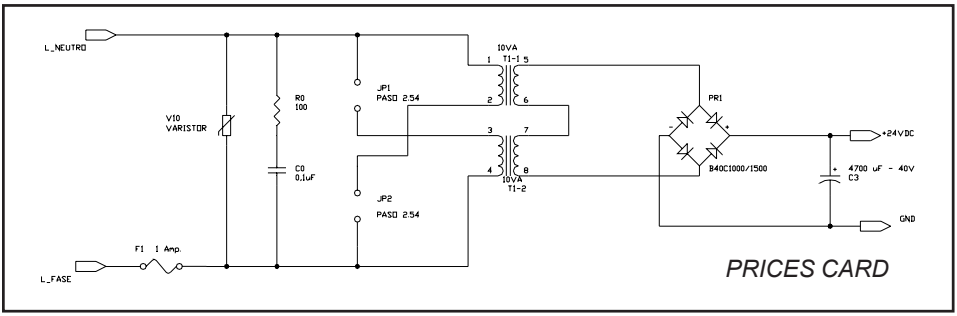

Figure 21. *Power supply Circuit*

Entrances/Exits Function

Entrances

The entrance signals, come from the machine in which we connected the payout unit, and are considered to begin the accomplishment of a service. These lines are the following ones:

All the received signals of entrance, are sent to optoacoplators circuits, for this way, galvanically to separate the machine of the payout unit and next these signals pass by means of the CON4 to the card control.

- ✓ **BLOCKING LINE** : By means of this line the machine indicates to him to the payout unit that allows the admission of currencies. It is received by means of a line of phase and is sent to the card of control by means of the signal **"BLOCKING"**.
- ✓ **PRICE LINE** : This line has double function, serves as Entrances and Exits simultaneously, when it works as entered receives the information of the selection made by means of a line of neutral by the corresponding line number and it is sent to the card of control by means of **"SENSOR"** signal.
- ✓ **ERASE LINE**: By means of this line the machine informs to the payout unit of the conclusion of the service is received by means of a line of phase and envia to the card of control by means of **"ERASE"** signal.

All the lines of entrance are protected by means of varistors against occasional surges coming from the machine.

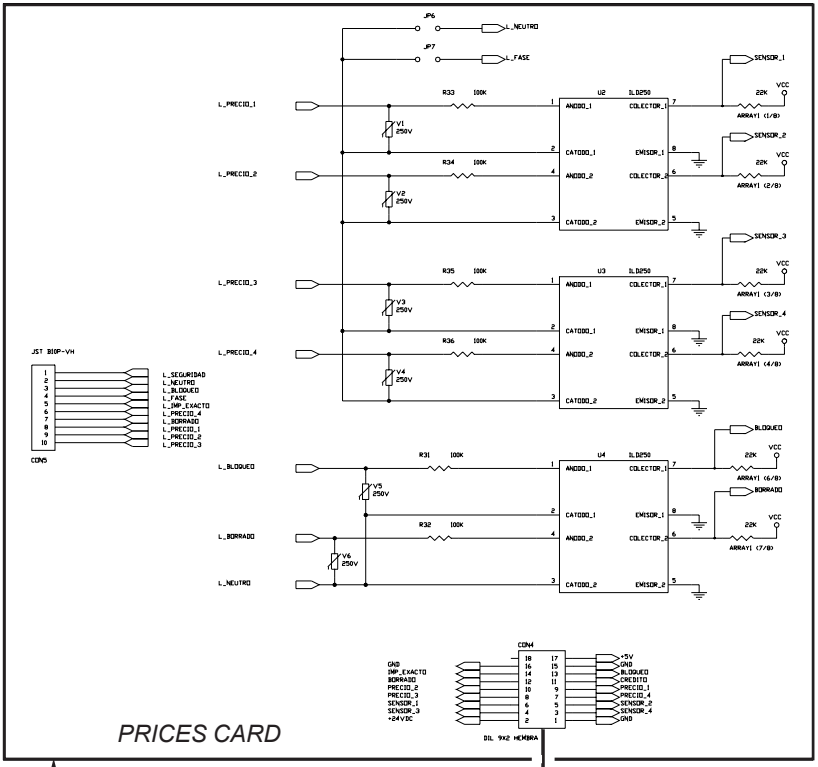

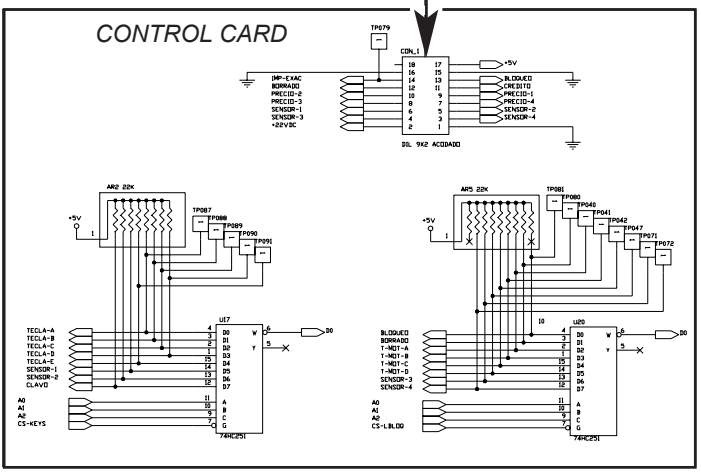

Figura 22. *Entrances*

Exits

The exit signals are those that come from the payout unit and are the answer to the request of a sale.

They are sent by means of relays galvanically to separate the payout unit of the machine.

- ✓ **PRICE LINE :** Working like exits, **"PRICE"** activates with the signal coming from the card control, when the sale begins. It appears as line of phase by the corresponding line number and is applied directly in the machine for the accomplishment of the sale.

  The circuit corresponding to the lines of price this prote'ge' against possible short circuits that can be produced in the machine, by means of a 6 A. fuse (F2).

- ✓ **SECURITY LINE :** This line envia with **phase** and is the inverse one of the line of prices, is to say estara present whenever not it this some line of prices.
- ✓ **OUT OF CHANGE LINE**: One activates with signal **"OUT OF CAHNGE"**. This line envia with **neutral** when the payout unit detects lack of changes that assure the return.
- ✓ **CREDIT LINE :** One activates with signal **"CREDIT"** and its operation is the one of a commutator that remains activated while credit exists.

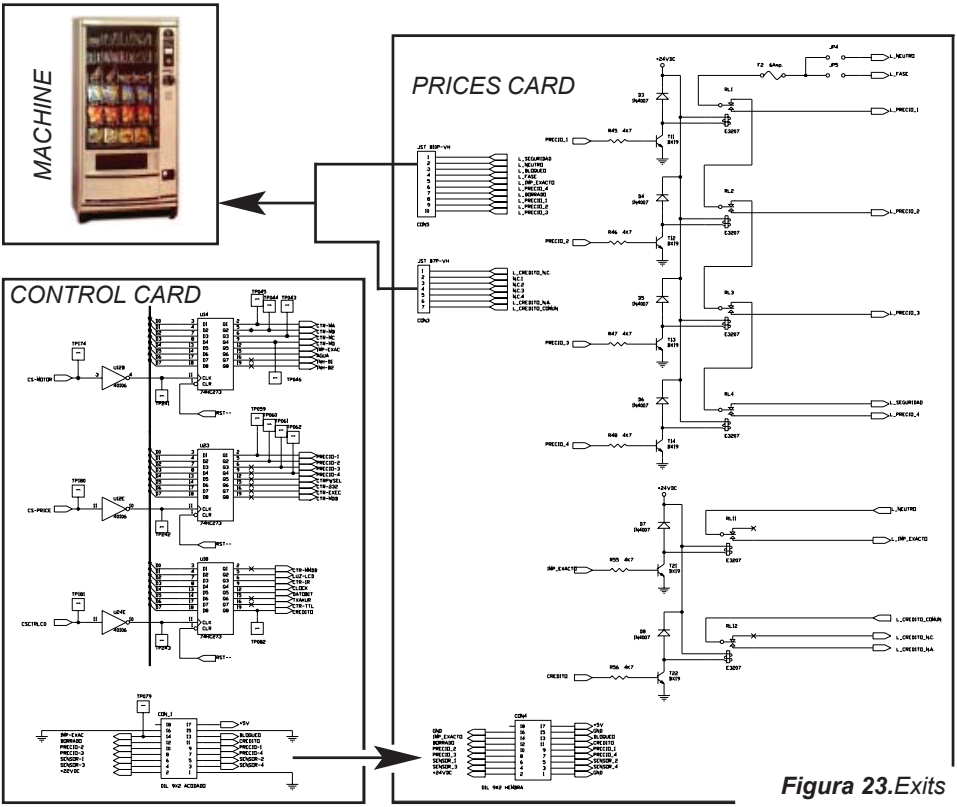

Figura 23. *Exits*

10.2 The meaning and definition of the various Price Lines

"Line" is the name given to the information sent by the payout unit to the machine in which it is installed, or from the machine to the payout unit, by means of changes in the value of the electrical phase voltage.

Button (or sensor) line

This line goes from the machine to the payout unit. It is activated when a machine button has been pressed, meaning when a product has been requested from the machine.

Price line

This line goes from the payout unit to the machine. When the payout unit receives a sensor line, it verifies whether or not it has received the sufficient amount of money to complete the sale, and if so, it activates the price line relay corresponding to that sensor line. The extractor motor of the product will thus receive power to operate.

When a button is pressed on the machine, for that brief instant during which the switch is closed, the following things occur:

- ✓ As it can be seen in the drawing, the circuit is closed between the payout unit phase line and the machine neutral, whereby a small electric current circulates (limited by the internal resistor of the payout unit). The current is not sufficient enough to start up the motor, but it is enough so that the payout unit can detect that a product from that selection has been requested (sensor line).
- ✓ The payout unit immediately verifies if sufficient credit has been introduced in order to be able to dispense that selection, and if so, it closes the relay, which starts up the product extractor motor of the machine (price line).

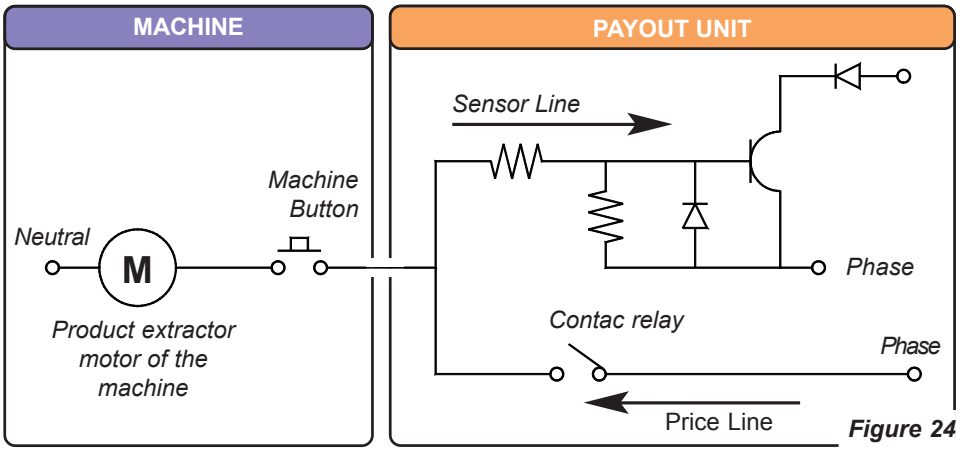

Figure 24

Blocking line

This line is a signal from the machine to the payout unit. It allows the machine to indicate to the payout unit whether it is in the process of selling product or if it is idle.

The machine sends a phase signal to the payout unit when it is idle and zero volts when it is completing a sale. In order for the payout unit to admit coins, it needs to have a phase signal on the blocking line.

Internal erase

If internal erase is programmed at the function **«240 SERVICE MODE»** this means that the payout unit charges the sale when it detects that the blocking line has disappeared. It therefore charges the sale immediately after the machine starts to dispense the product.

External erase

If external erase is programmed at the function **«240 SERVICE MODE»** then the payout unit waits to charge the sale until the machine has completed the sale and again sends the phase signal through the blocking line.

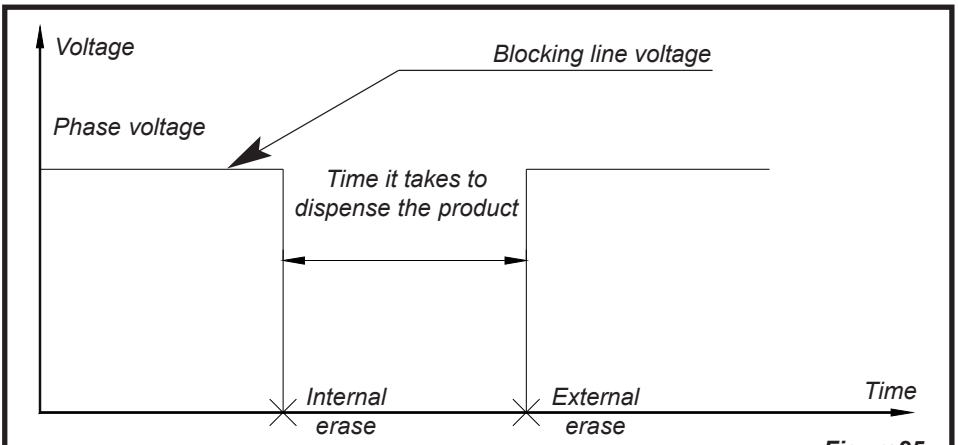

Figure25

Maintaining, or not, the price line

At the function **«240 SERVICE MODE»** it can be programmed to maintain or not maintain the price line. If it is programmed to maintain the price line, this means that the payout unit will send the price line (relay closed) for the entire time that it takes to dispense the product.

If it is programmed not to maintain the price line, the relay will remain closed only for an instant (milliseconds), just enough time to initialise the sale.

Programming one mode or another depends on whether or not the machine is capable of operating its product extractor motors.

If external erase is programmed, then this allows the price line to be maintained or not.

Security line

This is a signal from the payout unit to the machine. It allows the payout unit to indicate to the machine whether or not it can transact a sale. In order for the machine to transact sales, it needs to receive a phase signal through the security line.

If, due to a breakdown, a price line relay remains closed, as a protection system, the payout unit is prepared so that the machine cannot receive the phase signal through the security line cable.

There are machines that do not take into account the security line. In this case, the security line of the payout unit would remain free and could not be connected to any machine cable.

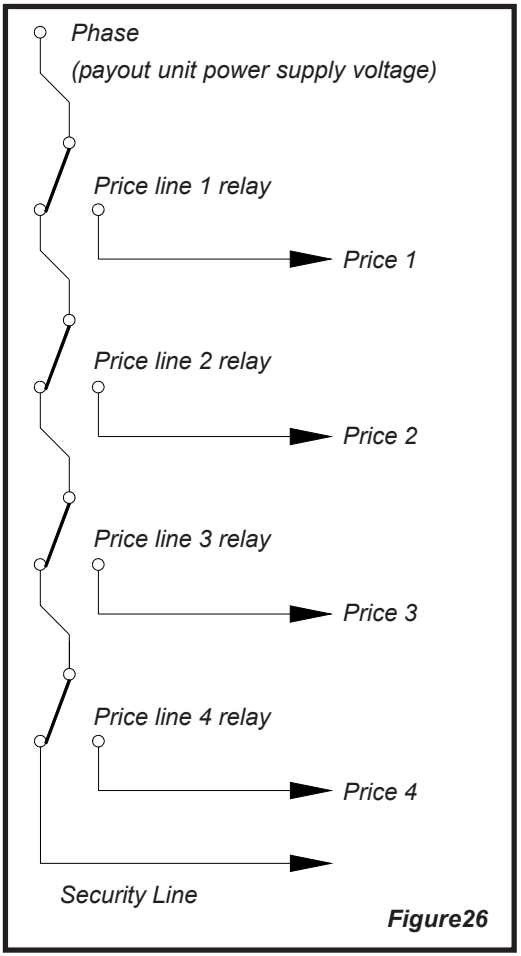

Figure26

EA Line

Some machine models, especially those designated for the sale of cold beverages, may be provided with a product output detector.

When an **AN 8000** series payout unit is installed in a machine with a product output detector, the payout unit receives the information sent by that detector through the EA line. In the event that the machine does not have a product output detector, the EA line of the payout unit must programmed OFF (**«240 SERVICE MODE»**). On the contrary, the machine would provide the product, but the payout unit would not charge the sale.

Out of change

When the payout unit is in an out-of-change situation, it is capable of illuminating a light on the machine indicating that exact change is needed. It therefore has a cable that can be connected to one of the phase lines of the machine light. The light must use the same voltage as what is used to power the payout unit.

11. External communications

It has serial communications that take place between the payout unit and the machine.

Communications are carried out by galvanically separating the payout unit circuit from the machine circuit. To do so, it uses an optocoupler circuit, ILCT 6 (U41).

Communications are enabled through the "CTR-MDB" signal, allowing transmission (TRX+MDB) and reception (RTX-MDB) between the payout unit and the machine.

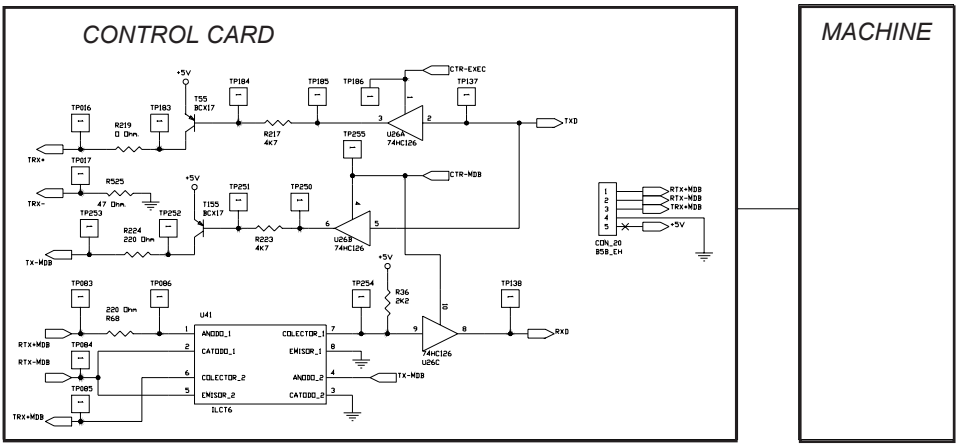

Figure 27. *External communications*

12. Control card

The schematic corresponding to the circuit in charge of executing the instructions contained in the payout unit program is the one indicated in the **figure 29**, where U1 (80C31) is the microprocessor circuit in charge of executing the program contained in the Eprom memory (U3).

Circuit U2 (74hc273) is the circuit that converts the data bus into the lower part of the address bus. U3 is the Eprom memory with a 512-k capacity (MDB), which contains the payout unit's operating program. U55 is a 2k EEprom memory whose function is to save information from the returner tubes and classification and activation of the Euro.

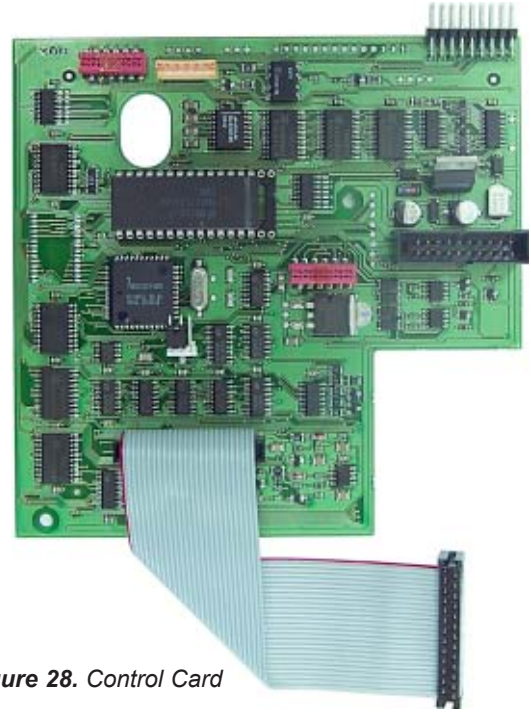

Figure 28. *Control Card*

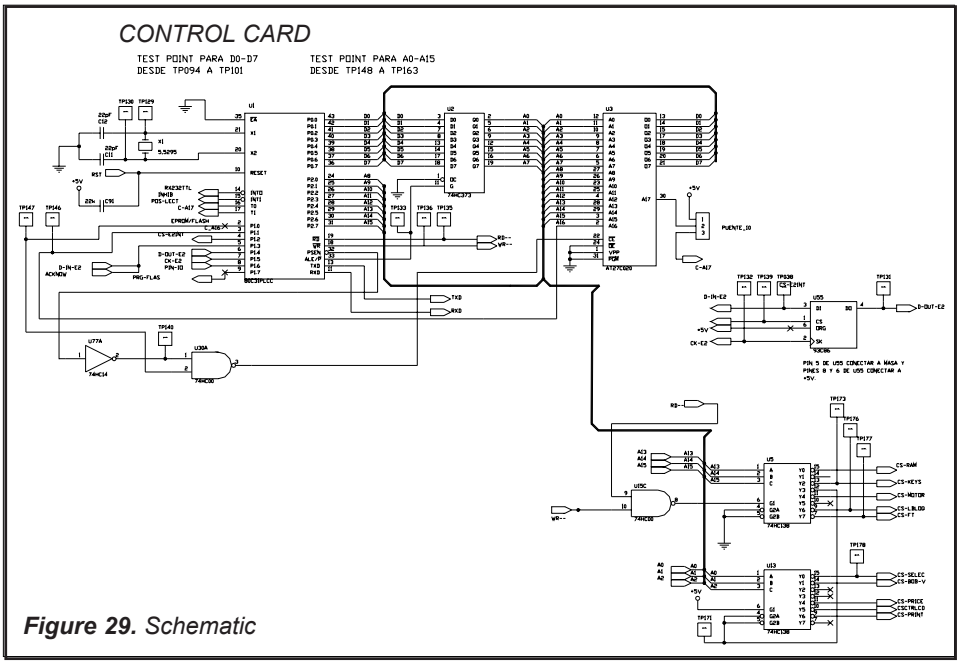

Figure 29. *Schematic*

13. Reset circuit

The function of the reset circuit is to reset the control card under the following circumstances:

- ✓ When the payout unit is connected for the first time.
- ✓ When the program does not execute correctly.
- ✓ When the power supply falls below 12V.

Operation

The circuit in charge of performing these functions is the U32 (LM555), which operates like a timer.

When the power supply is connected to the payout unit, level 1 appears at pin 3 on the U32, and it begins to reset the time corresponding to the C6 condenser charge of 1M through resistor R80. If the program does not execute correctly, the TXAKUR signal does not appear, and the C2 is charged until the U12D swings to level 0. As a result, this level 0 is applied at pin 2 of the U32, causing a reset. If a fall in the power supply below 5V occurs at the R73, the C3 discharges and level 0 appears at pin 2 of the U32, causing a reset.

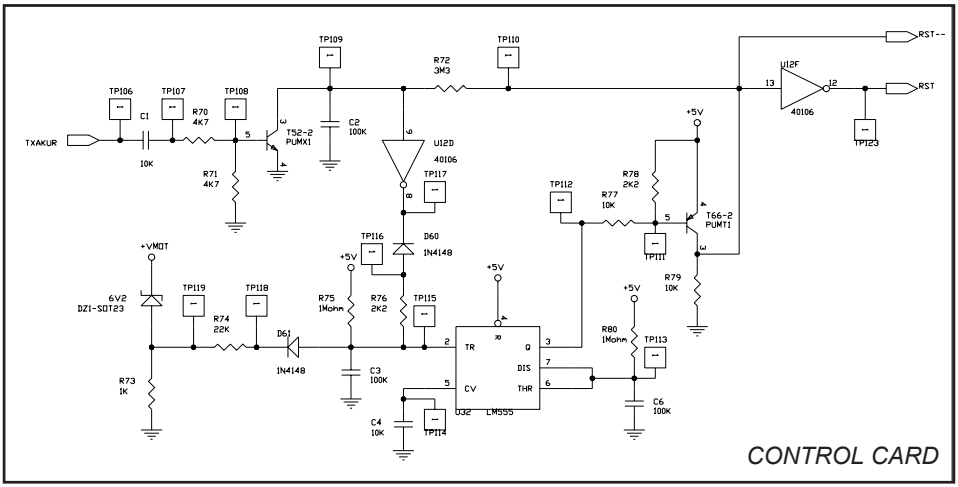

Figure 30. *Operation*

14. Coin Selector

Figure 31. Coin Selector

Function

The function of the coin selector is to admit the coins for which it has been programmed and to reject the rest.

Operation

The **L66S** series is characterised by its communication with the machine. It allows the machine to make the decision about whether or not to admit a coin and make the decision about the destination of the coin. The communications mode is described below:

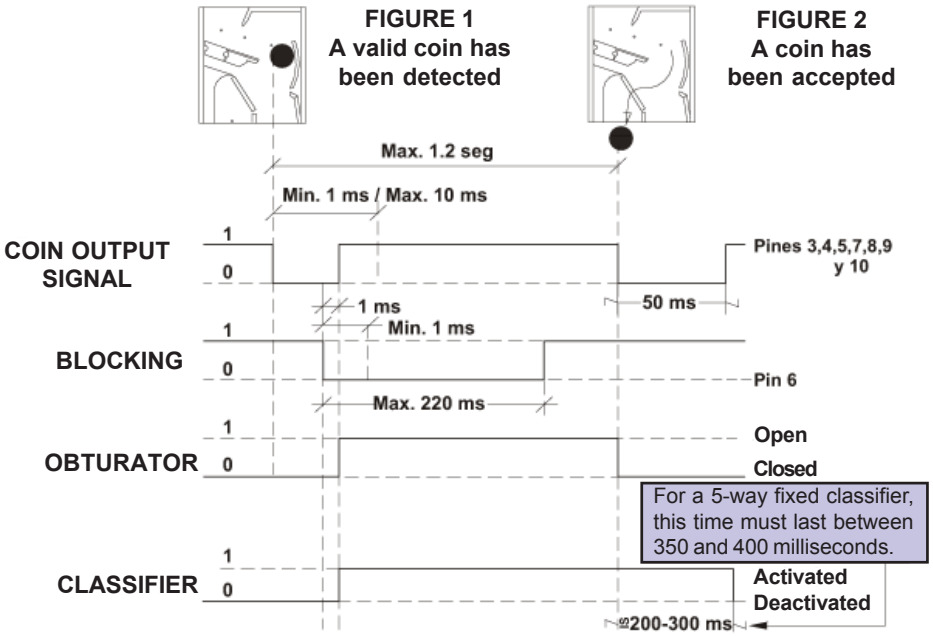

FIGURE 1 shows the moment at which the coin has passed through all of the sensors that are used to analyse it, and the selector initiates communications with the machine:

The communications cycle consists of transmitting, for 10 milliseconds, the code for the identified coin so that the machine can decide on its admission or rejection and, after verifying the status of its returner tubes-payout units, manage the classifier in order to direct the coin to the appropriate place. In order for the coin to be admitted, the machine must set the blocking line (pin 6) to 0 before the end of the 10 milliseconds used for transmitting the coin code. If this does not happen, the selector will reject the coin. If the machine sets blocking to 0 while the selector is transmitting, then the selector will cease transmission, and it will open the obturator so that the coin is accepted. This is also the ideal time for the machine to order the classifier to move and give it time to get into position.

In **FIGURE 2**, the coin can be seen leaving the selector, cutting the light beam from the output photocell. The selector determines that the acceptance cycle has concluded when this light beam is re-established. It will then deactivate the obturator (close it) and transmit the code of the already accepted coin for 50 milliseconds so that the machine accounts for it. The classifier will remain activated for 200 to 300 milliseconds after the selector detects the coin output in order to ensure that the coin properly leaves for the selected destination. In the event that a fixed 5-way classifier is used, this time must be increased to 350 to 400 milliseconds.

14.1 Operational diagram of the L66S selector

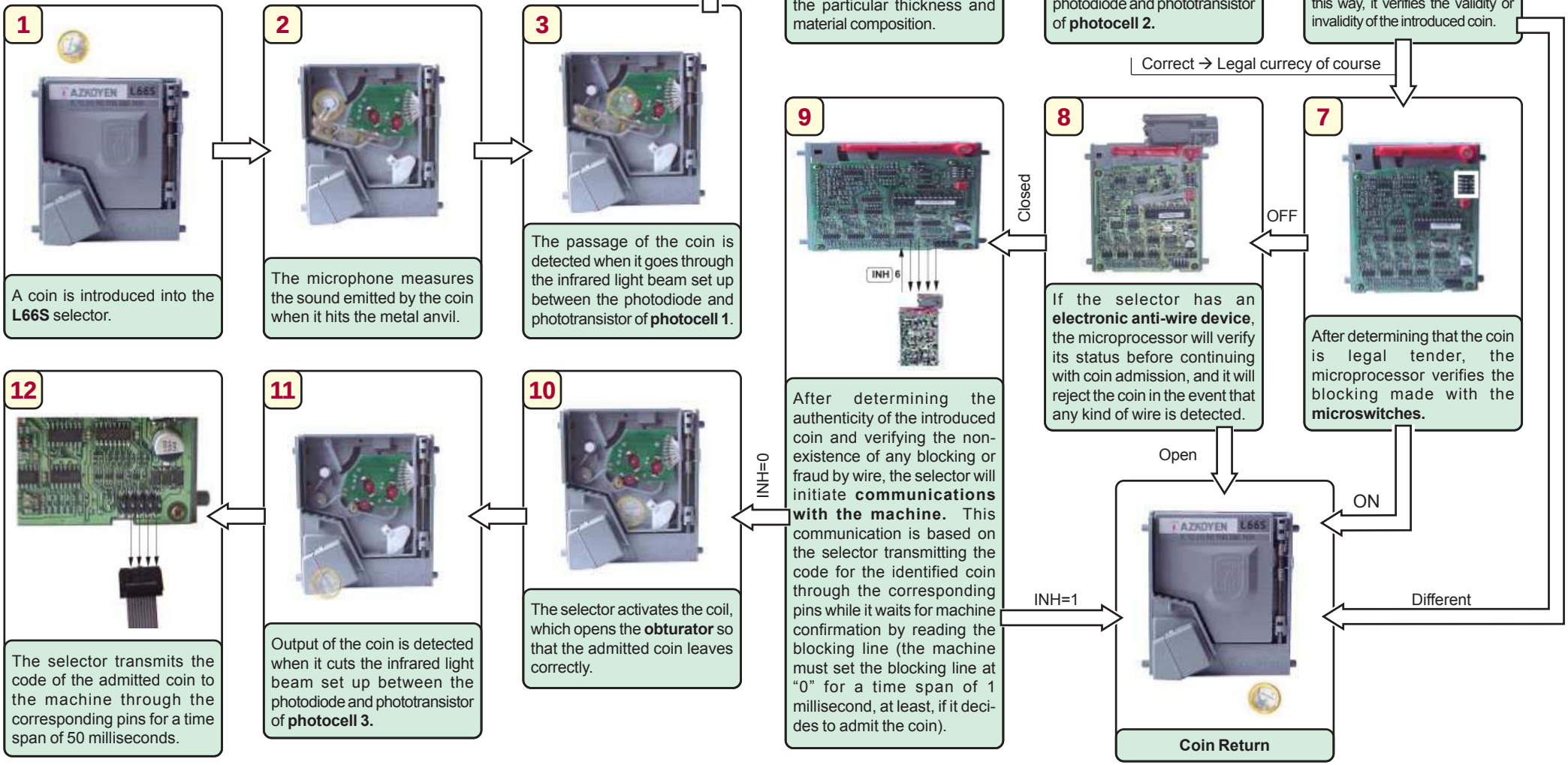

The coin outputs and blocking that this selector has available are shown below:

Coin	1	5	20	50
Output	4	4/8	7	4/7
Blocking	1	1	1/3	1/4

Coin	2c	5c	10c	20c	50c	1 eur	2 eur
Output	3/8	3/4/8	3/7	3/4/7	3/8/7	3/4/8/7	3/9
Blocking	2	2	2	2	2	2	2

Power supply

The power supply that enters the selector is 15VDC. The selector has a control circuit, LM 7805, that converts the tension to 5 VDC in order to supply the different circuits.

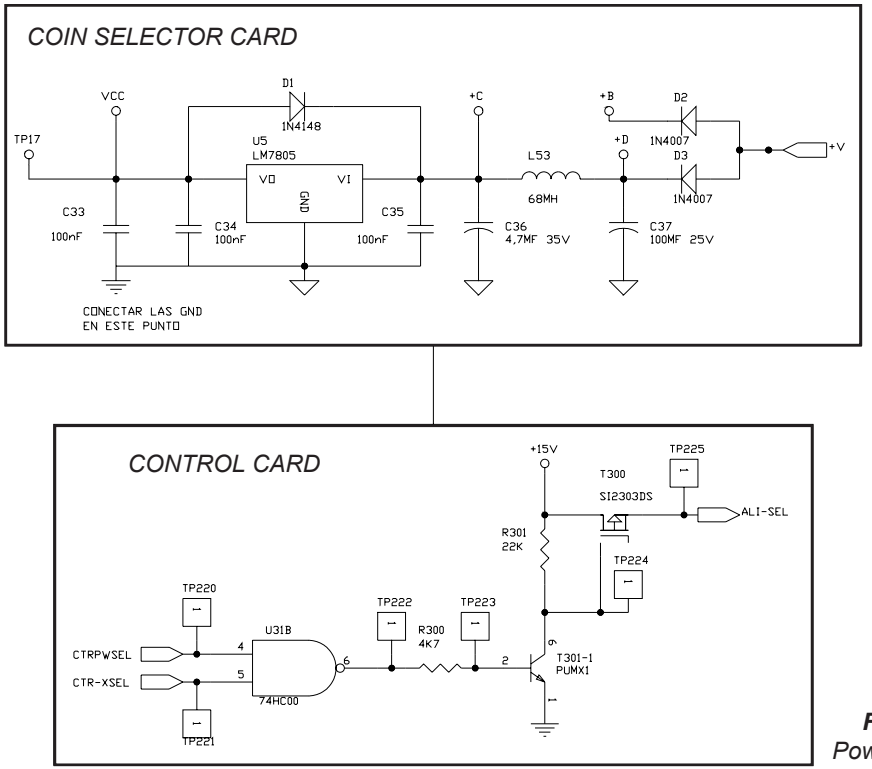

Figure 32. *Power supply*

Outputs

The U1 (74hc259) is a decoder whose function is to activate the corresponding output transistor. The output transistors operate on open-collector mode, and when they are polarised they send level 0. The coin codes are sent to the U10 (74hc240), which is in an inverter controlled by the "CS-SELEC" signal.

The T8 is activated by the selector obturator.

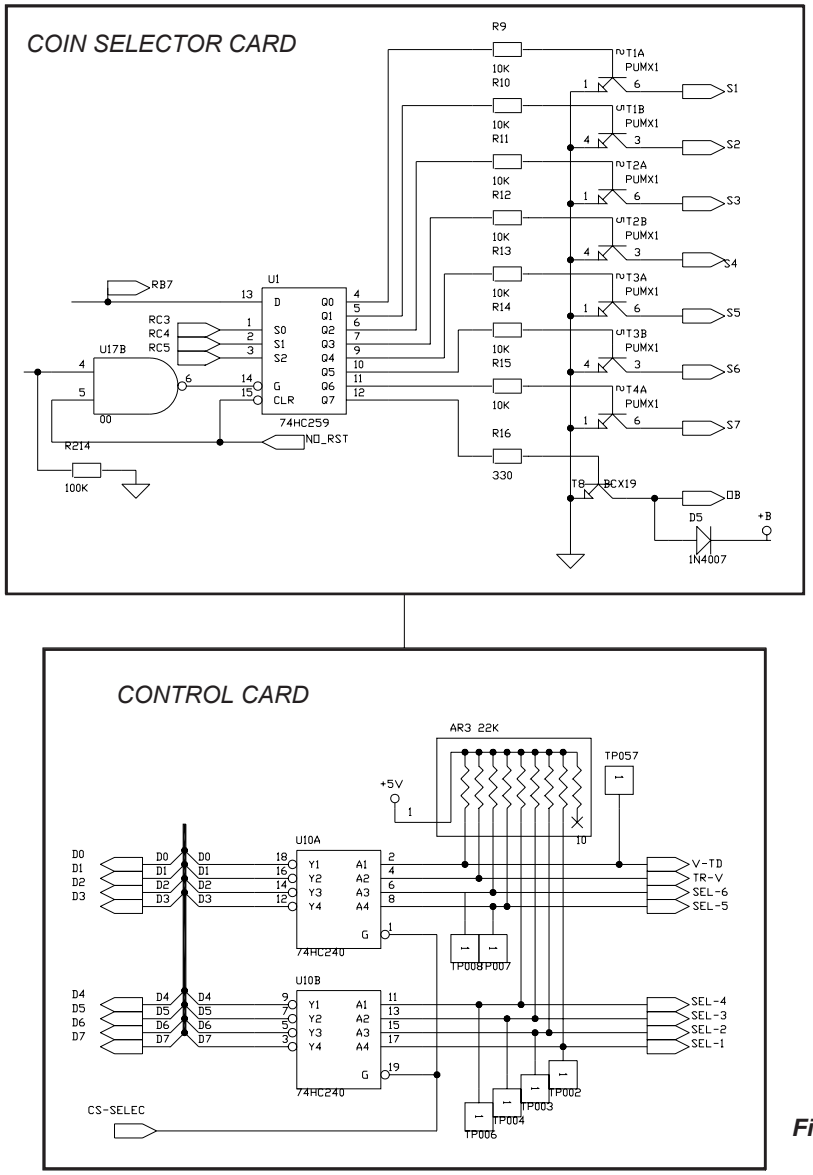

Figure 33. *Outputs*

Marcas del

AZKOYEN

AZKOYEN MEDIOS DE PAGO S.A.

CHC Hostelería

Teidde